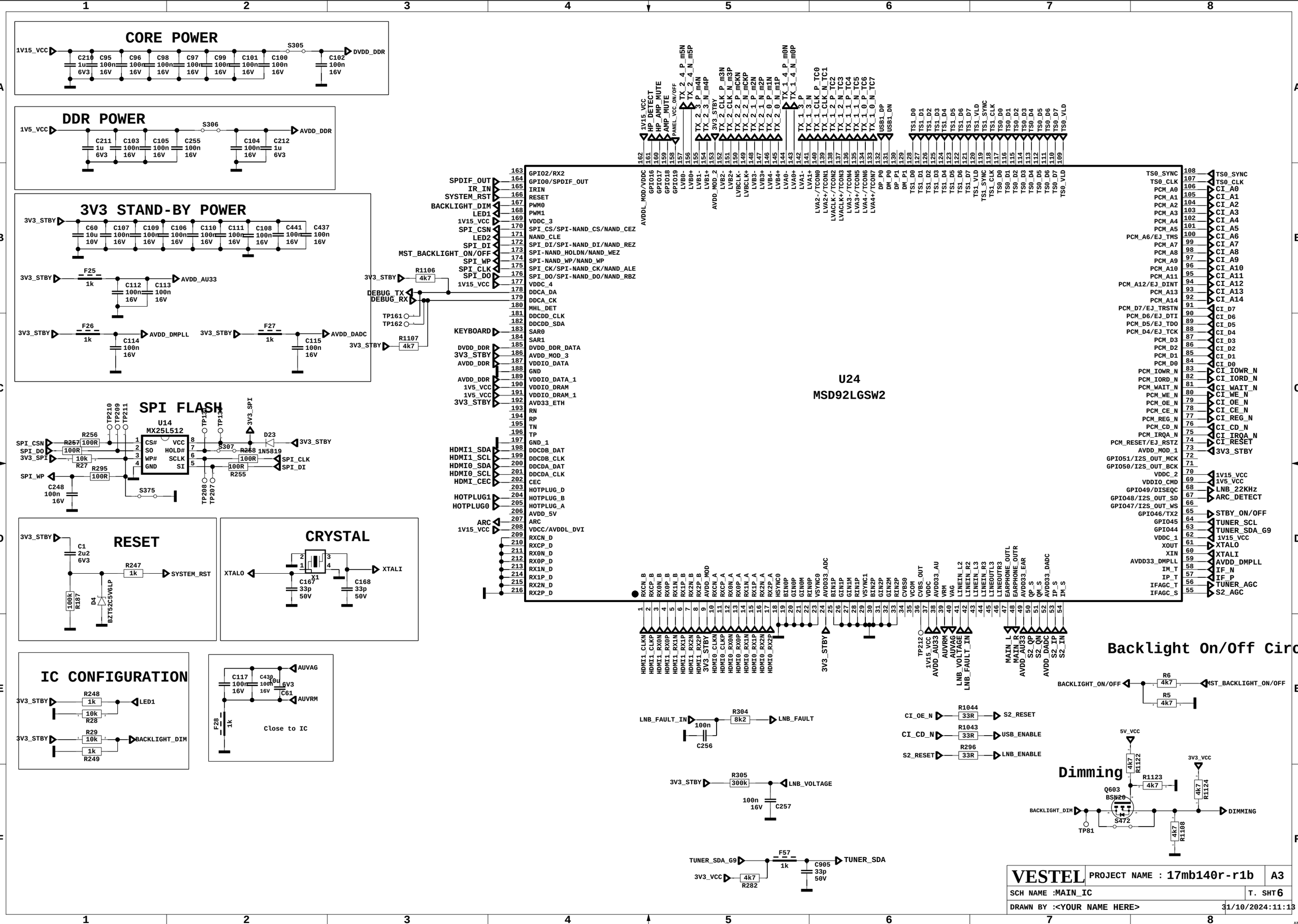
CORE POWER
1V15_VCC
C210 1u 6V3
C95 100n 16V
C96 100n 16V
C98 100n 16V
C97 100n 16V
C99 100n 16V
C101 100n 16V
C100 100n 16V
S305
C102 100n 16V
DVDD_DDR
DDR POWER
1V5_VCC
C211 1u 6V3
C103 100n 16V
C105 100n 16V
C255 100n 16V
S306
C104 100n 16V
C212 1u 6V3
AVDD_DDR
3V3 STAND-BY POWER
3V3_STBY
C60 10u 10V
C107 100n 16V
C109 100n 16V
C106 100n 16V
C110 100n 16V
C111 100n 16V
C108 100n 16V
C441 100n 16V
C437 100n 16V
F25 1k
C112 100n 16V
C113 100n 16V
AVDD_AU33
F26 1k
C114 100n 16V
AVDD_DMPLL
F27 1k
C115 100n 16V
AVDD_DADC
SPI FLASH
U14
MX25L512
SPI_CSN
SPI_DO
3V3_SPI
SPI_WP
R256 100R
R257 100R
R27 10k
R295 100R
C248 100n 16V
CS# VCC
SO HOLD#
WP# SCLK
GND SI
TP210 TP209 TP211
TP132 TP133
TP208 TP207
S307
R258 100R
R255 100R
D23 1N5819
SPI_CLK
SPI_DI
S375
RESET
3V3_STBY
C1 2u2 6V3
R247 1k
SYSTEM_RST
R187 100k
D4 BZT52C5V6LP
CRYSTAL
XTALO
XTALI
X1
C167 33p 50V
C168 33p 50V
IC CONFIGURATION
R248 1k
LED1
R28 10k
R29 10k
BACKLIGHT_DIM
R249 1k
AUVAG
AUVRM
C117 100n 16V
C438 100n 16V
C61 10u 6V3
F28 1k
Close to IC
SPDIF_OUT
IR_IN
SYSTEM_RST
BACKLIGHT_DIM
LED1
1V15_VCC
SPI_CSN
LED2
SPI_DI
MST_BACKLIGHT_ON/OFF
SPI_WP
SPI_CLK
SPI_DO
R1106 4k7
DEBUG_TX
DEBUG_RX
TP161
TP162
R1107 4k7
KEYBOARD
DVDD_DDR
3V3_STBY
AVDD_DDR
1V5_VCC
HDMI1_SDA
HDMI1_SCL
HDMI0_SDA
HDMI0_SCL
HDMI_CEC
HOTPLUG1
HOTPLUG0
ARC
GPIO2/RX2
GPIO0/SPDIF_OUT
IRIN
RESET
PWM0
PWM1
VDDC_3
SPI_CS/SPI-NAND_CS/NAND_CEZ
NAND_CLE
SPI_DI/SPI-NAND_DI/NAND_REZ
SPI-NAND_HOLDN/NAND_WEZ
SPI-NAND_WP/NAND_WP
SPI_CK/SPI-NAND_CK/NAND_ALE
SPI_DO/SPI-NAND_DO/NAND_RBZ
VDDC_4
DDCA_DA
DDCA_CK
MHL_DET
DDCDD_CLK
DDCDD_SDA
SAR0
SAR1
DVDD_DDR_DATA
AVDD_MOD_3
VDDIO_DATA
GND
VDDIO_DATA_1
VDDIO_DRAM
VDDIO_DRAM_1
AVD33_ETH
RN
RP
TN
TP
GND_1
DDCDB_DAT
DDCDB_CLK
DDCDA_DAT
DDCDA_CLK
CEC
HOTPLUG_D
HOTPLUG_B
HOTPLUG_A
AVDD_5V
ARC
VDCC/AVDDL_DVI
RXCN_D
RXCP_D
RX0N_D
RX0P_D
RX1N_D
RX1P_D
RX2N_D
RX2P_D
U24
MSD92LGSW2
TS0_SYNC
TS0_CLK
PCM_A0
PCM_A1
PCM_A2
PCM_A3
PCM_A4
PCM_A5
PCM_A6/EJ_TMS
PCM_A7
PCM_A8
PCM_A9
PCM_A10
PCM_A11
PCM_A12/EJ_DINT
PCM_A13
PCM_A14
PCM_D7/EJ_TRSTN
PCM_D6/EJ_DTI
PCM_D5/EJ_TDO
PCM_D4/EJ_TCK
PCM_D3
PCM_D2
PCM_D1
PCM_D0
PCM_IOWR_N
PCM_IORD_N
PCM_WAIT_N
PCM_WE_N
PCM_OE_N
PCM_CE_N
PCM_REG_N
PCM_CD_N
PCM_IRQA_N
PCM_RESET/EJ_RSTZ
AVDD_MOD_1
GPIO51/I2S_OUT_MCK
GPIO50/I2S_OUT_BCK
VDDC_2
VDDIO_CMD
GPIO49/DISEQC
GPIO48/I2S_OUT_SD
GPIO47/I2S_OUT_WS
GPIO46/TX2
GPIO45
GPIO44
VDDC_1
XOUT
XIN
AVDD33_DMPLL
IM_T
IP_T
IFAGC_T
IFAGC_S
CI_A0
CI_A1
CI_A2
CI_A3
CI_A4
CI_A5
CI_A6
CI_A7
CI_A8
CI_A9
CI_A10
CI_A11
CI_A12
CI_A13
CI_A14
CI_D7
CI_D6
CI_D5
CI_D4
CI_D3
CI_D2
CI_D1
CI_D0
CI_IOWR_N
CI_IORD_N
CI_WAIT_N
CI_WE_N
CI_OE_N
CI_CE_N
CI_REG_N
CI_CD_N
CI_IRQA_N
CI_RESET
3V3_STBY
1V15_VCC
1V5_VCC
LNB_22KHz
ARC_DETECT
STBY_ON/OFF
TUNER_SCL
TUNER_SDA_G9
1V15_VCC
XTALO
XTALI
AVDD_DMPLL
IF_N
IF_P
TUNER_AGC
S2_AGC
Backlight On/Off Circ
BACKLIGHT_ON/OFF
R6 4k7
R5 4k7
MST_BACKLIGHT_ON/OFF
LNB_FAULT_IN
R304 8k2
100n C256
LNB_FAULT
CI_OE_N
R1044 33R
S2_RESET
CI_CD_N
R1043 33R
USB_ENABLE
S2_RESET
R296 33R
LNB_ENABLE
3V3_STBY
R305 300k
100n 16V C257
LNB_VOLTAGE
Dimming
5V_VCC
R1122 4k7
3V3_VCC
R1123 4k7
R1124 4k7
Q603 BSN20
BACKLIGHT_DIM
TP81
S472
R1108 4k7
DIMMING
TUNER_SDA_G9
F57 1k
C905 33p 50V
TUNER_SDA
3V3_VCC
R282 4k7
VESTEL
PROJECT NAME : 17mb140r-r1b
A3
SCH NAME :MAIN_IC
T. SHT6
DRAWN BY :<YOUR NAME HERE>
31/10/2024:11:13

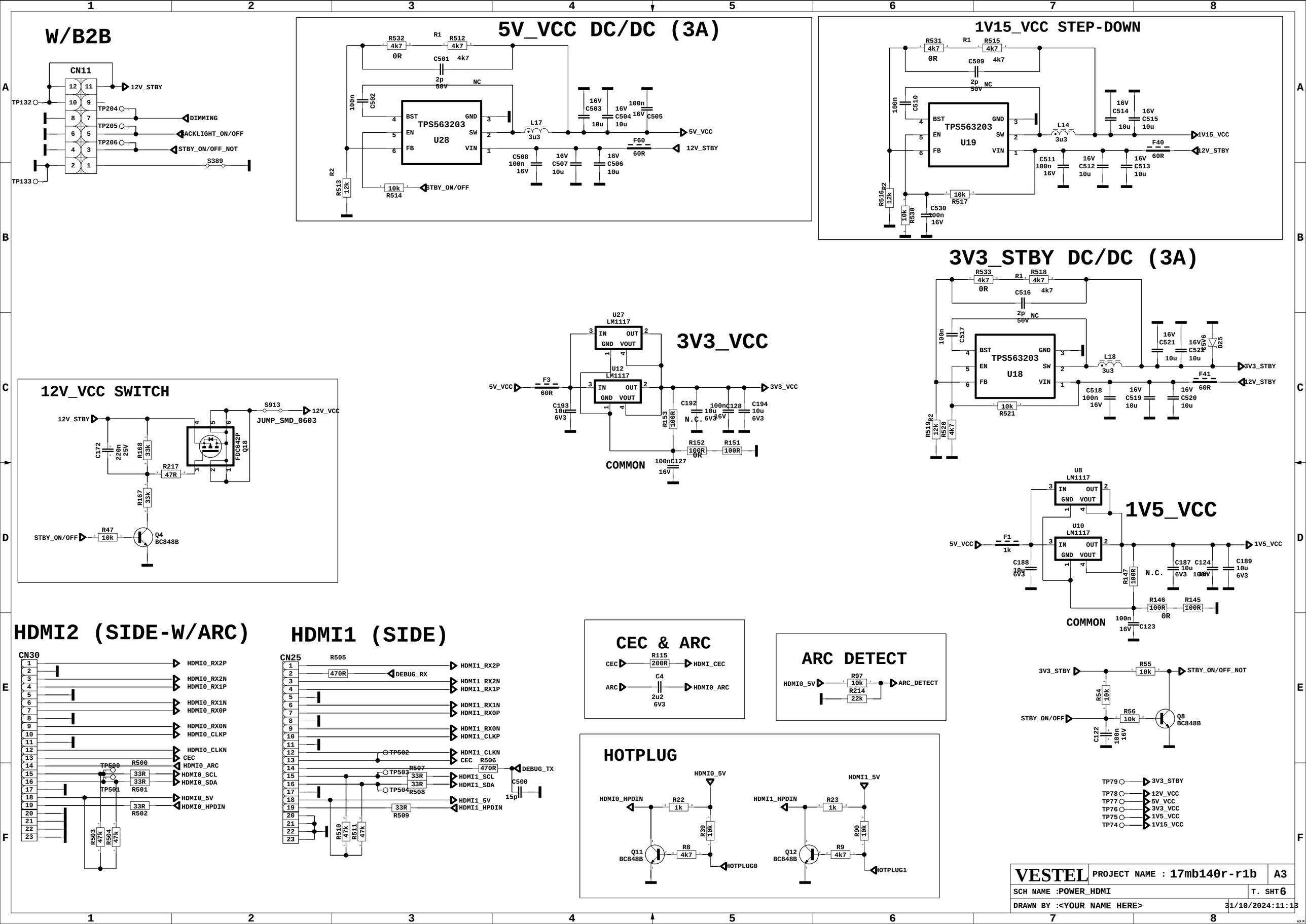
W/B2B
CN11
12V_STBY
TP132
TP204
TP205
TP206
DIMMING
BACKLIGHT_ON/OFF
STBY_ON/OFF_NOT
S389
TP133
5V_VCC DC/DC (3A)
TPS563203
U28
BST
GND
EN
SW
FB
VIN
R532 4k7
R512 4k7
R1
0R
C501 4k7
2p 50V
NC
100n C502
L17 3u3
C503 16V 10u
C504 16V 10u
C505 100n 16V
5V_VCC
F60 60R
12V_STBY
C508 100n 16V
C507 16V 10u
C506 16V 10u
R513 12k
R2
10k R514
STBY_ON/OFF
1V15_VCC STEP-DOWN
TPS563203
U19
R531 4k7
R515 4k7
C509 4k7
2p 50V
NC
100n C510
L14 3u3
C514 16V 10u
C515 16V 10u
1V15_VCC
F40 60R
12V_STBY
C511 100n 16V
C512 16V 10u
C513 16V 10u
R516 12k
10k R517
10k R530
C530 100n 16V
3V3_STBY DC/DC (3A)
TPS563203
U18
R533 4k7
R518 4k7
C516 4k7
2p 50V
NC
100n C517
L18 3u3
C521 16V 10u
C522 16V 10u
D25 5V6
3V3_STBY
F41 60R
12V_STBY
C518 100n 16V
C519 16V 10u
C520 16V 10u
10k R521
R519 12k
R520 4k7
R2
3V3_VCC
U27 LM1117
U12 LM1117
IN OUT
GND VOUT
5V_VCC
F3 60R
C193 10u 6V3
C192 10u 6V3
N.C.
100n C128 16V
C194 10u 6V3
3V3_VCC
R153 100R
R152 100R
0R
R151 100R
COMMON
100n C127 16V
12V_VCC SWITCH
12V_STBY
S913
JUMP_SMD_0603
12V_VCC
C172 220n 25V
R168 33k
R217 47R
FDC642P Q18
R167 33k
STBY_ON/OFF
R47 10k
Q4 BC848B
U8 LM1117
U10 LM1117
1V5_VCC
5V_VCC
F1 1k
C188 10u 6V3
C187 10u 6V3
C124 100n 16V
C189 10u 6V3
1V5_VCC
R147 100R
N.C.
R146 100R
R145 100R
0R
COMMON
100n 16V C123
HDMI2 (SIDE-W/ARC)
CN30
HDMI0_RX2P
HDMI0_RX2N
HDMI0_RX1P
HDMI0_RX1N
HDMI0_RX0P
HDMI0_RX0N
HDMI0_CLKP
HDMI0_CLKN
CEC
HDMI0_ARC
HDMI0_SCL
HDMI0_SDA
HDMI0_5V
HDMI0_HPDIN
TP500
TP501
R500 33R
R501 33R
R502 33R
R503 47k
R504 47k
HDMI1 (SIDE)
CN25
R505 470R
DEBUG_RX
HDMI1_RX2P
HDMI1_RX2N
HDMI1_RX1P
HDMI1_RX1N
HDMI1_RX0P
HDMI1_RX0N
HDMI1_CLKP
HDMI1_CLKN
CEC
R506 470R
DEBUG_TX
C500 15p
TP502
TP503
TP504
R507 33R
R508 33R
HDMI1_SCL
HDMI1_SDA
HDMI1_5V
HDMI1_HPDIN
R509 33R
R510 47k
R511 47k
CEC & ARC
CEC
R115 200R
HDMI_CEC
ARC
C4 2u2 6V3
HDMI0_ARC
ARC DETECT
HDMI0_5V
R97 10k
R214 22k
ARC_DETECT
HOTPLUG
HDMI0_5V
HDMI0_HPDIN
R22 1k
R39 10k
Q11 BC848B
R8 4k7
HOTPLUG0
HDMI1_5V
HDMI1_HPDIN
R23 1k
R90 10k
Q12 BC848B
R9 4k7
HOTPLUG1
3V3_STBY
R55 10k
STBY_ON/OFF_NOT
R54 10k
STBY_ON/OFF
R56 10k
Q8 BC848B
C122 100n 16V
TP79 3V3_STBY
TP78 12V_VCC
TP77 5V_VCC
TP76 3V3_VCC
TP75 1V5_VCC
TP74 1V15_VCC
VESTEL
PROJECT NAME : 17mb140r-r1b
A3
SCH NAME :POWER_HDMI
T. SHT 6
DRAWN BY :<YOUR NAME HERE>
31/10/2024:11:13

TUNER

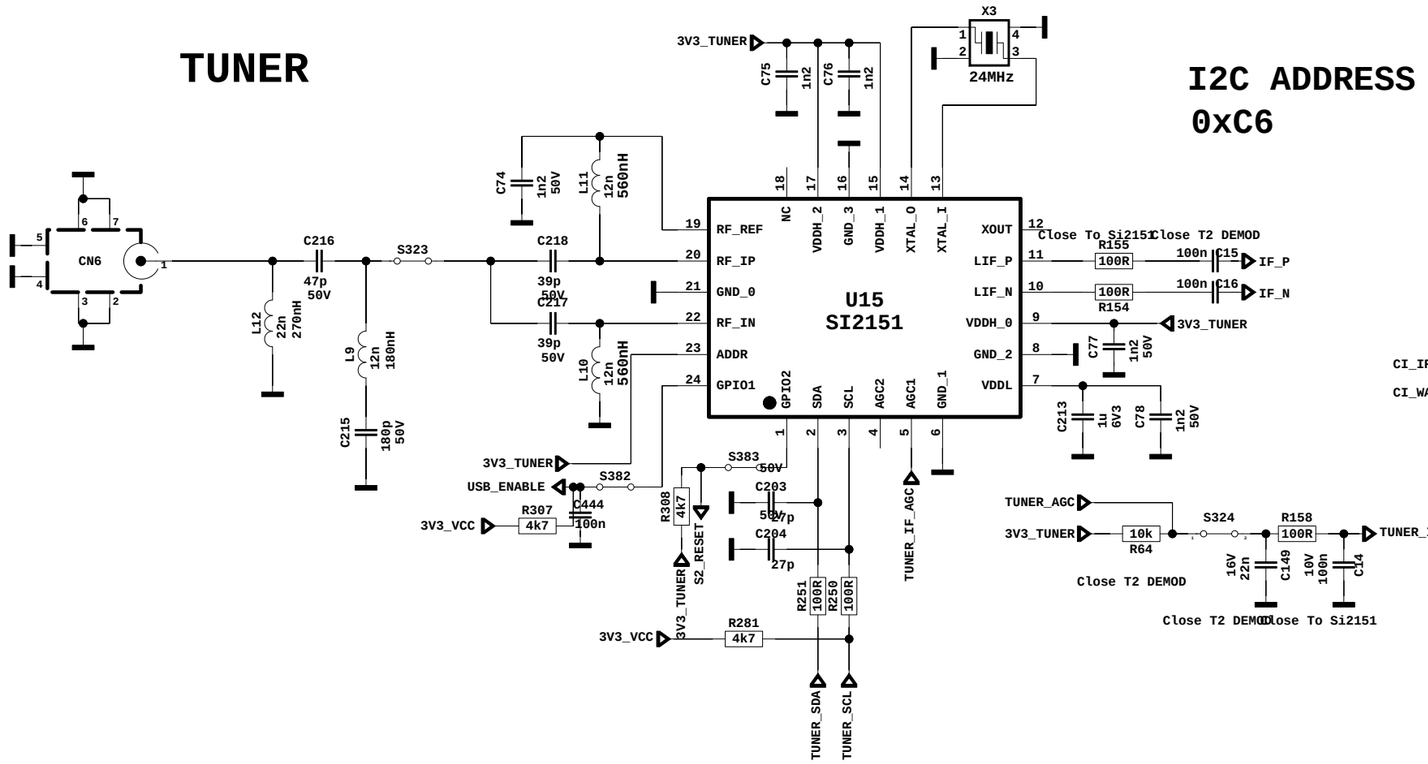

I2C ADDRESS
0xC6

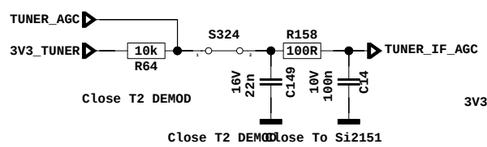

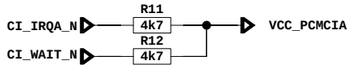

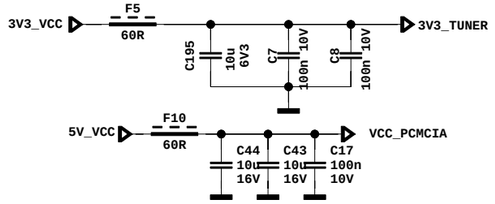

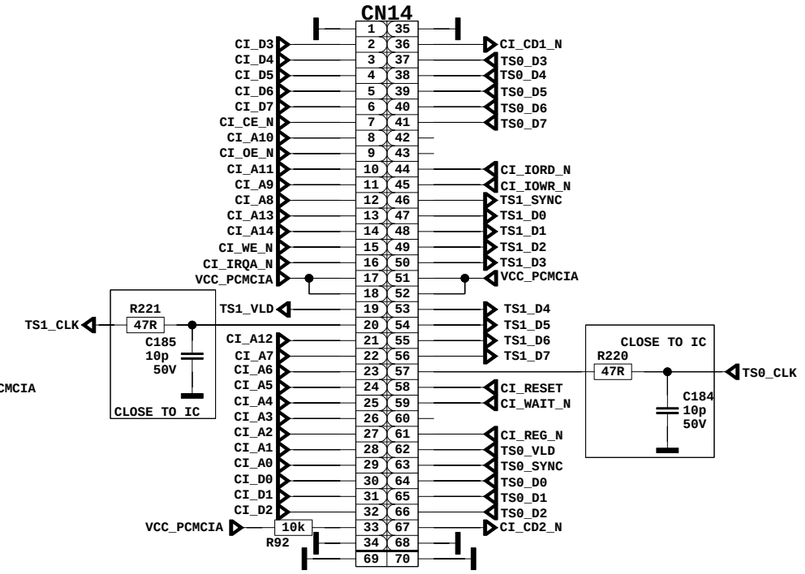

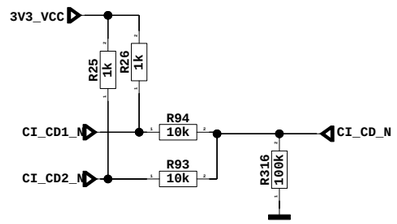

SAT TUNER

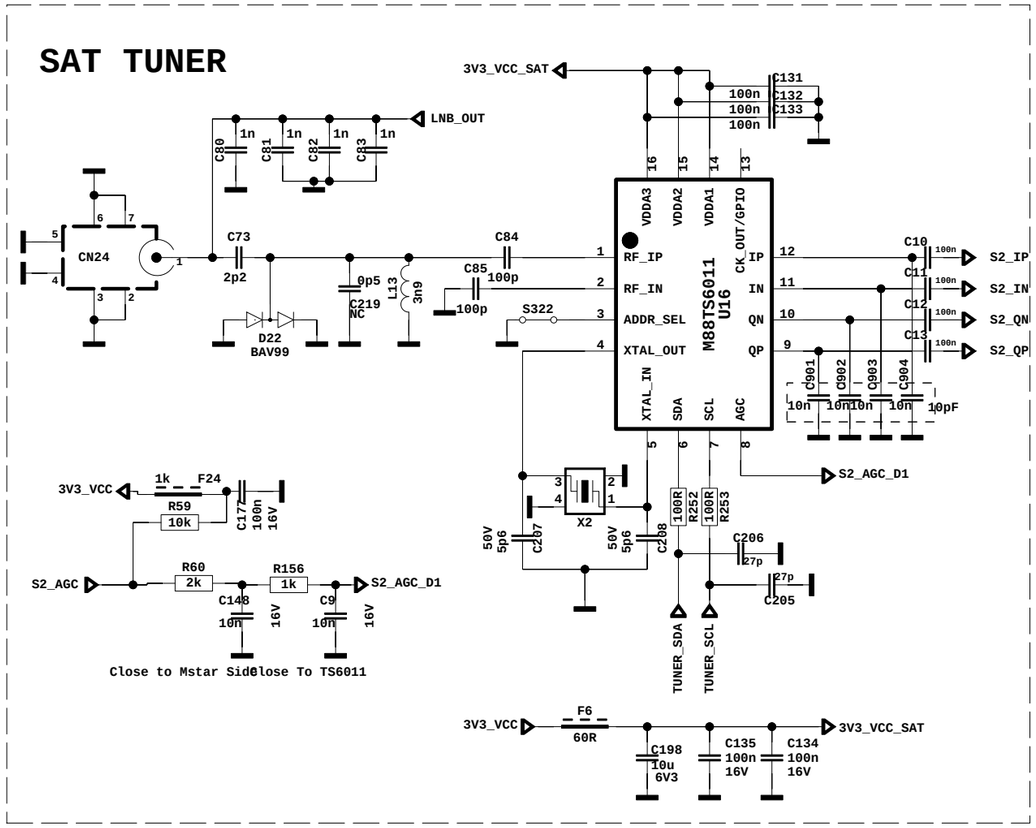

LNBP

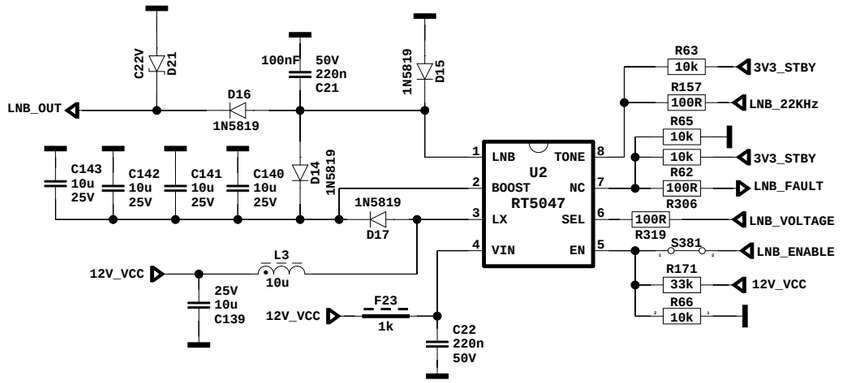

	LNB_VOLTAGE	LNB_EN
HIGH	18V	ENABLE
LOW	13V	DISABLE

VESTEL	PROJECT NAME : 17mb140r-r1b	A3
SCH NAME :TUNER_SAT_LNB_CI		T. SHT 6
DRAWN BY :<YOUR NAME HERE>		31/10/2024:08:38

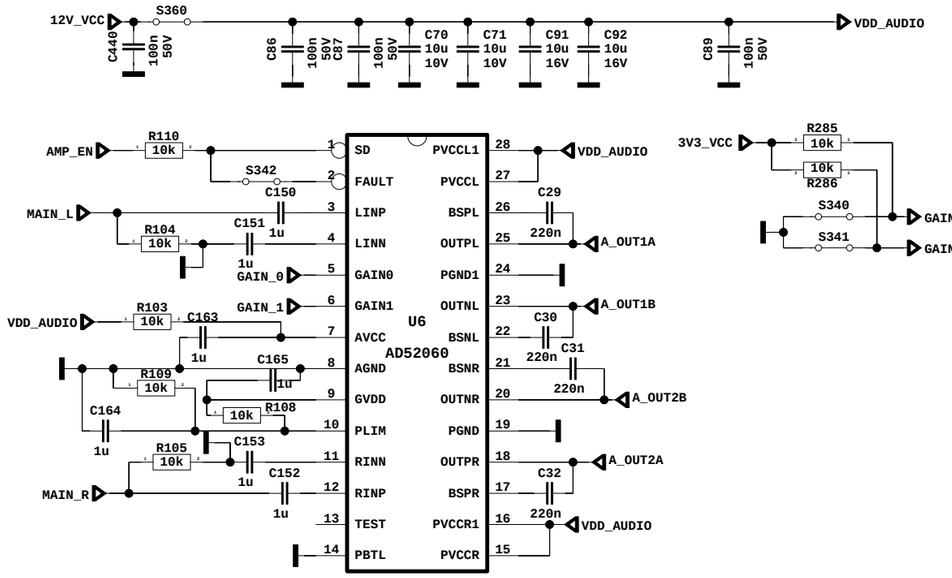

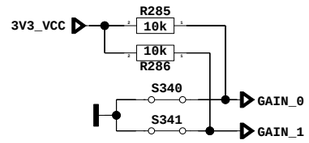

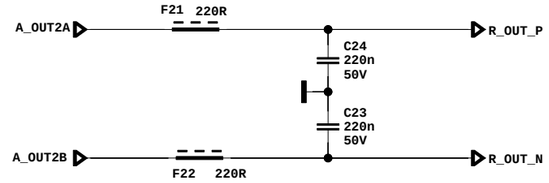

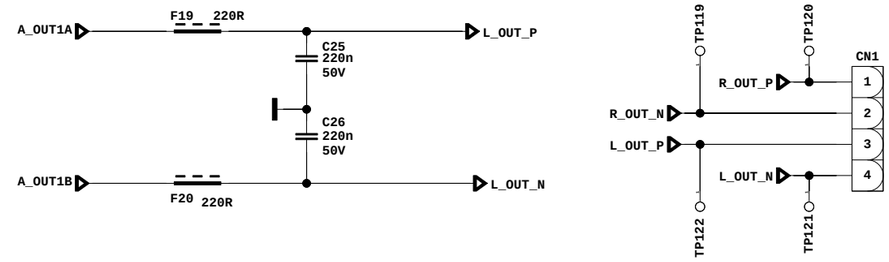

HEADPHONE OUTPUT

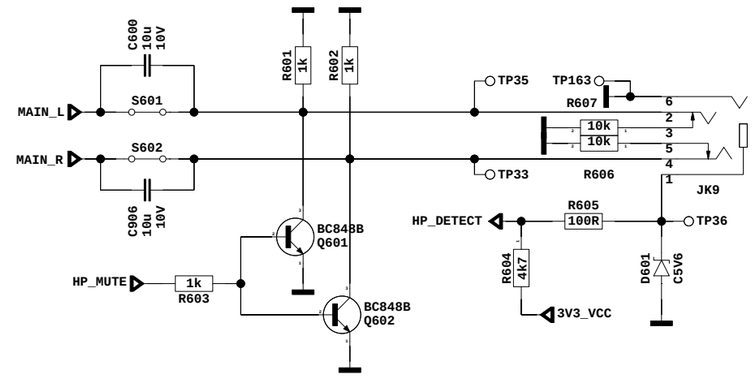

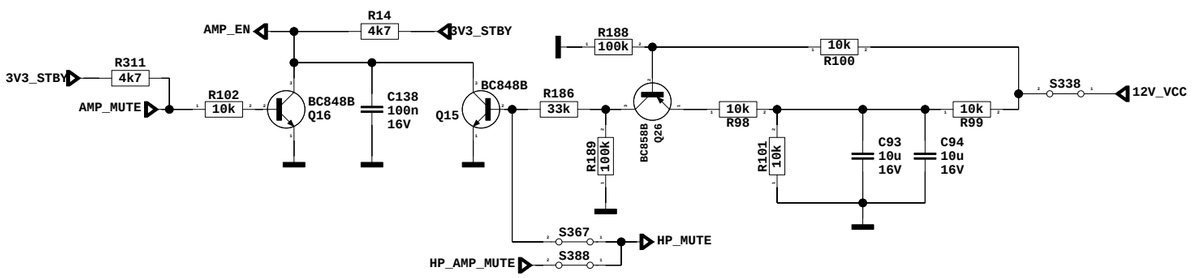

SPDIF OUT

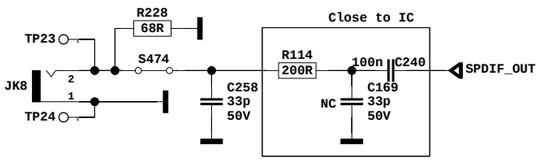

USB

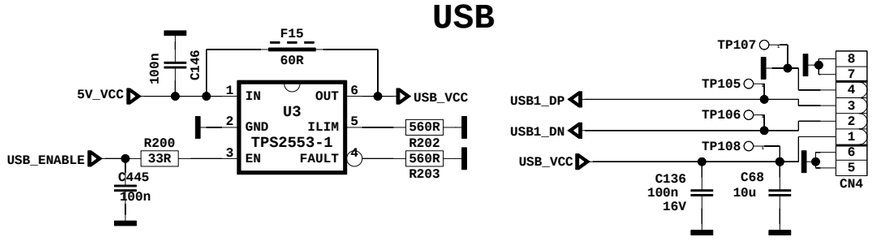

LED

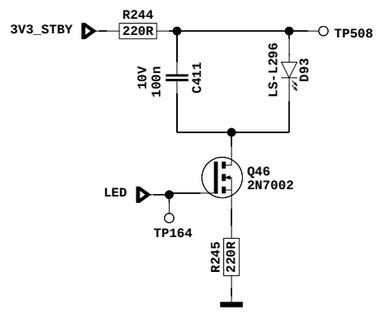

TACT SWITCH

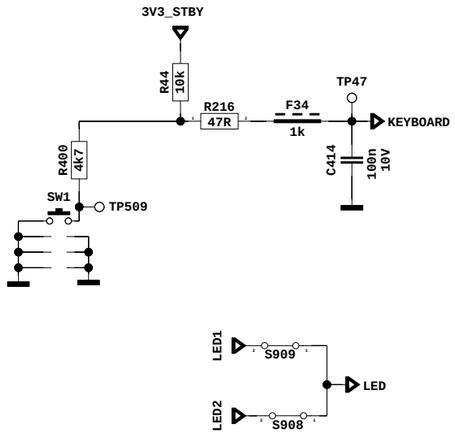

IR

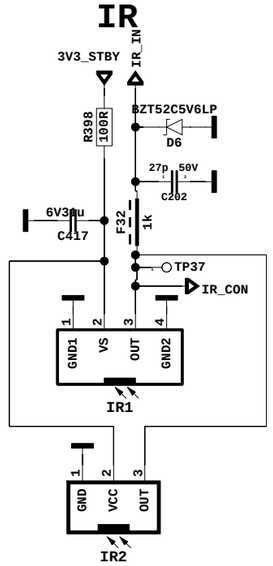

VESTEL	PROJECT NAME : 17mb140r-r1b	A3
SCH NAME :AUDIO_AV_IN/OUT_USB		T. SHT 6
DRAWN BY :<YOUR NAME HERE>		31/10/2024:08:38

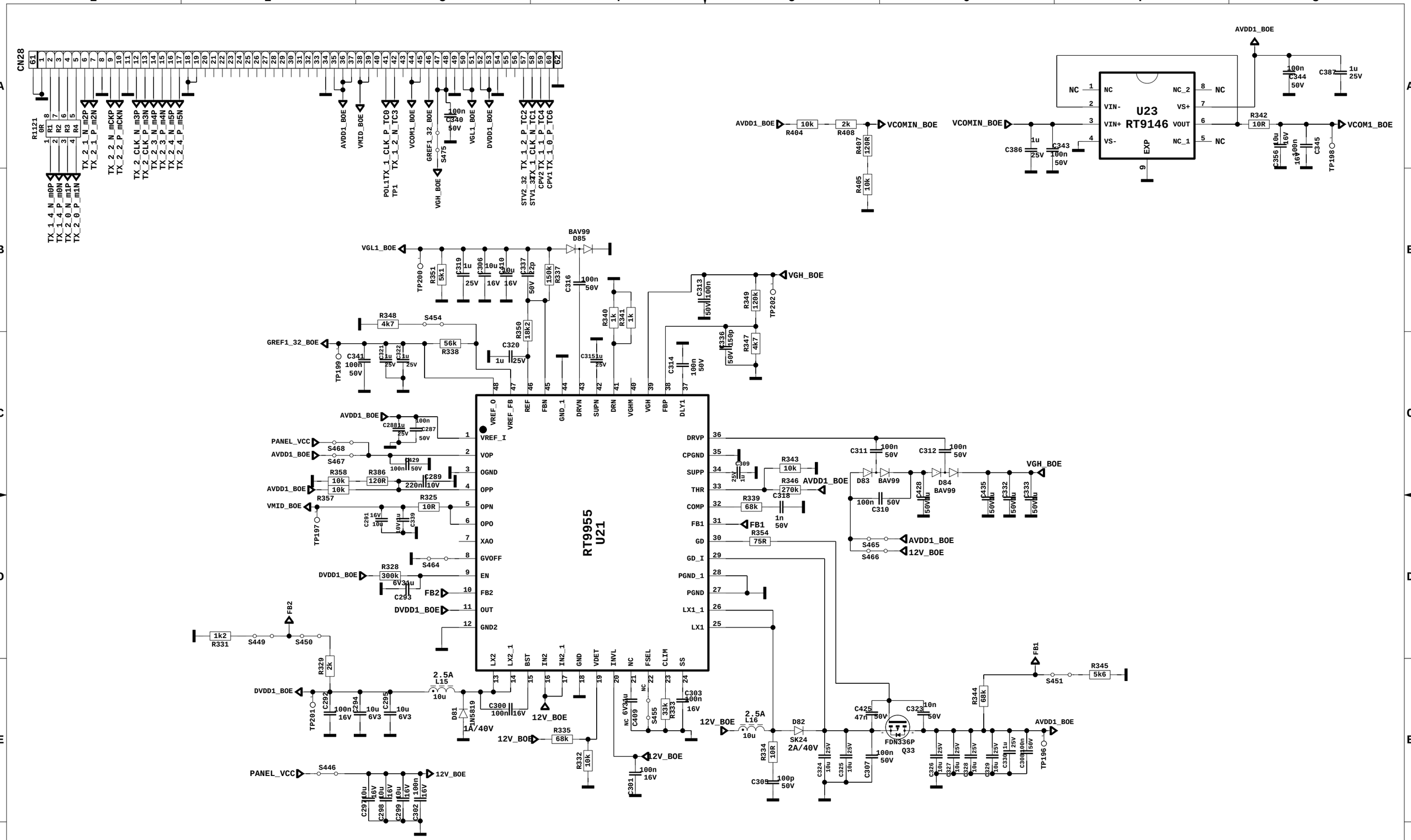

VESTEL	PROJECT NAME : 17mb140r-r1b	A3
SCH NAME :BOE_PMIC		T. SHT 6
DRAWN BY :<YOUR NAME HERE>		31/10/2024:15:16

51 PIN FHD

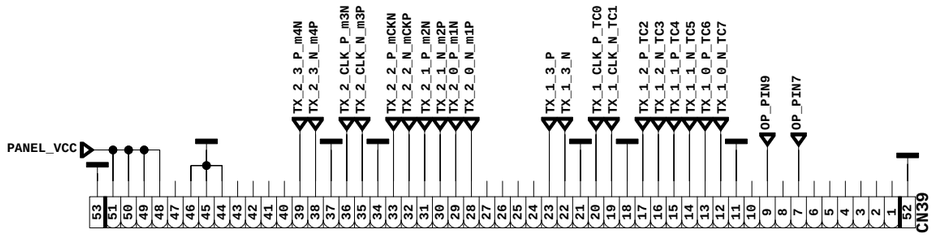

OPTIONS TABLE

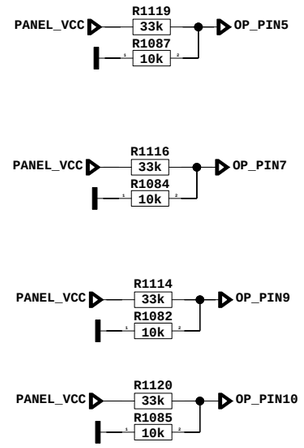

PANEL SUPPLY SWITCH

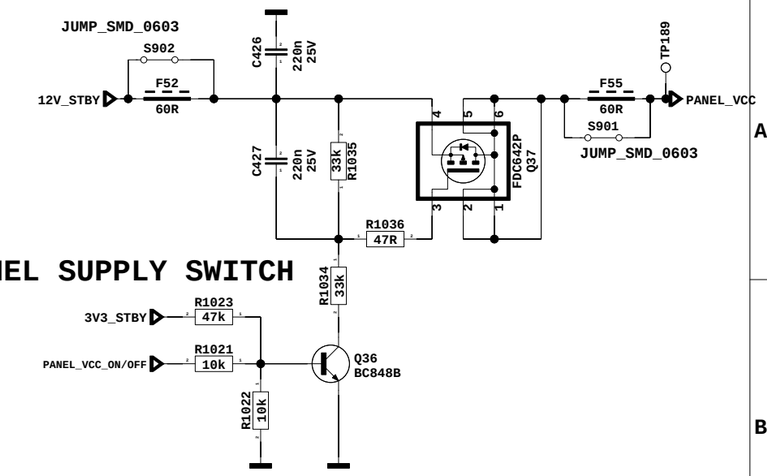

WXGA FFC

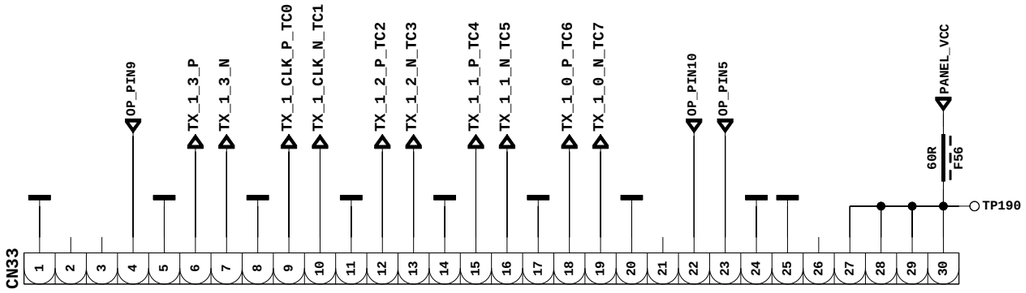

VESTEL	PROJECT NAME : 17mb140r-r1b	A3
SCH NAME :LVDS		T. SHT 6
DRAWN BY :<YOUR NAME HERE>		31/10/2024:08:38